”Dialogmøte Aluminium” – February 2009

- Short background current activities within Aluminium research and development at IFE
  - Specialized finite element modelling tools aluminium production and processing
    - Electrolysis including magnetohydrodynamics and side crust modelling
    - Solidification – multiclient projects with international financing in addition to RCN and Norwegian industry
      - Semi-continuous casting (DC, HDC, TRC, WheelAndBelt ..) - world leading modelling tools
      - Shape casting
      - > 20 years continuous co-operation with NTNU/SINTEF within casting modelling
    - Welding of aluminium alloys – original Hydro/NTNU projects emerging into automotive industry (beta-version in use by Audi, BMW, Daimler, Porsche, Volkswagen)
    - Local hot-forming of aluminium alloys – including coupling between FEM and microstructure development
  - Raw materials for aluminium production
    - CO_2 quota pricing implies possible new processing routes for alumina

Future R&D

- Pre-competitive tools
  - Accuracy and predictability based on mathematical modelling tools are ever increasing ...
  - Well suited for co-operation between industry partners that is also meeting each others as competitors
- Innovations cast products
  - Including increased content of low-cost recycle-based input material
  - Development time and cost are crucial for success → Must avoid trial-and-error methods only → Modelling
- Innovations in processing
  - New ”smart” processes and products
  - Local hot forming ..

Example: Local hot forming process for crash box

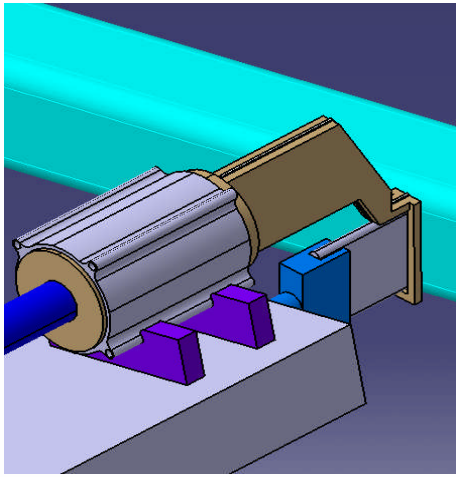

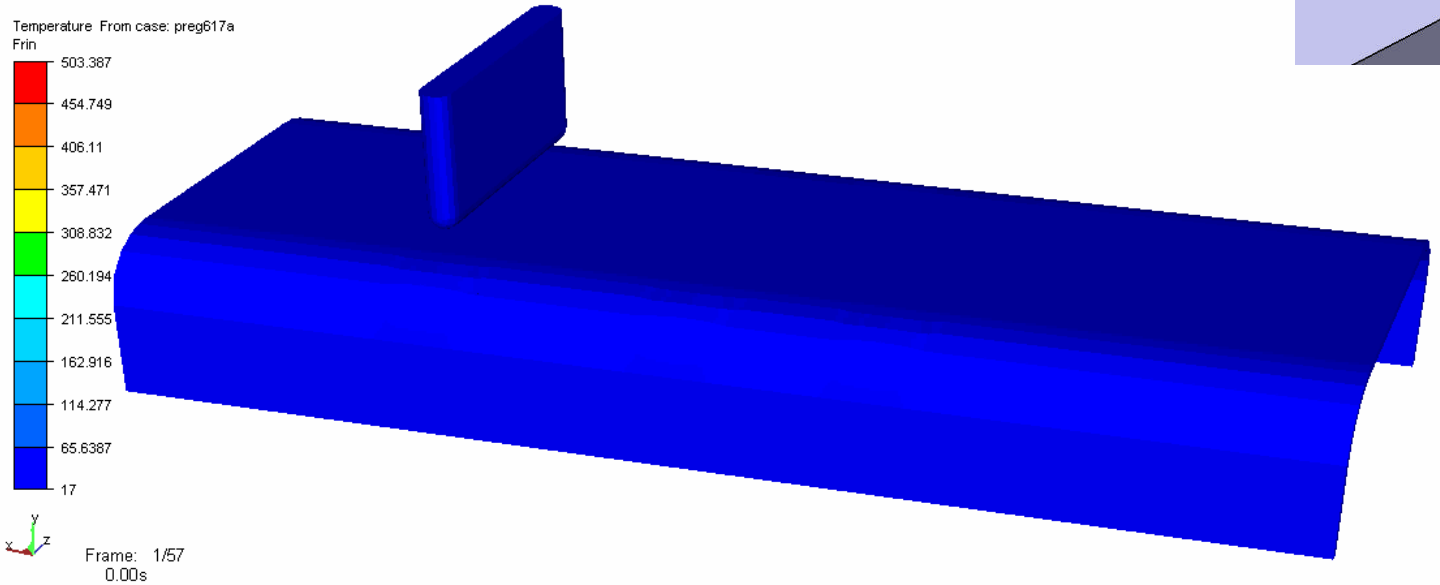

Internationalization/Restructuring

- Main challenges for Norwegian industry:
  - Energy prices
  - Growing global competition
  - New requirements due to increased share of recycled materials
- In order to stay competitive, an ever stronger focus on:
  - Advanced products
  - Low-cost recycle-based input material
  - Tailor made processes
- Possible added RCN support in the financial crisis
  - Pilot production new products or processes